UNIFLOWTECH
Product Catalog

Eletromagnetic Flowmeter





Water and other conductivity fluids

UNIFLOWTECH

Principle of Operation

Faraday's Laws of Induction form the basis for the electromagnetic flowmeter which states that a voltage is generated in a conductor as it moves through a magnetic field. This principle is applied to a conductive fluid which flows through the meter tube perpendicular to the direction of the magnetic field (see Schematic).

The voltage which is induced in the fluid is measured at two electrodes located diametrically opposite to each other. This signal voltage U_E is proportional to the magnetic induction B, the electrode spacing D and the average fluid velocity v.

Since the magnetic induction B and the electrode spacing D are constant values, the signal voltage U_E is proportional to the average flow velocity v. The equation for calculating the volumetric flowrate shows that the signal voltage U_E is linear and proportional to the volumetric flowrate. The induced signal voltage is converted into

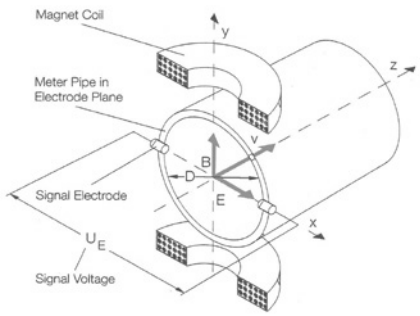

U_E = Signal Voltage (V)
B = Magnetic Induction (T)
D = Electrode Spacing (m)
v = Average Flow Velocity (m/s)
*qv = Volume Flowrate (m³/s)
K = Ratio factor

$$U_E \sim B \cdot D \cdot V \cdot K$$

$$qv = \frac{D^2 \pi}{4} \cdot V$$

$$qv = \frac{\pi D}{4KB} U_E$$







Integral

	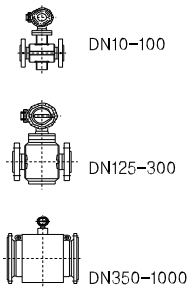	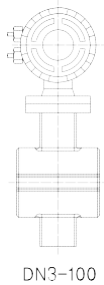	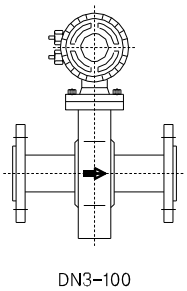	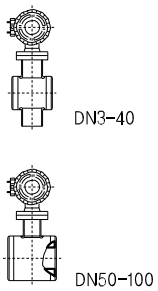
	Fixed Flange	Wafer Design	Fixed Flange	Wafer Design
Housing Material	Aluminum and Carbon Steel Housing Series 1000		Stainless Housing Series 2000	
	Option : SUS304 / SUS316			

Primary

Model	MGF1000S	MGF1000W	MGF2000F	MGF2000W
Size (mm)	DN10-DN1000	DN3-DN100	DN3-DN100	DN3-DN100
Pressure Class (MPa)	1.0-4.0(According to size)	1.0-4.0(According to size)	1.0-4.0(According to size)	1.0-4.0(According to size)
Liner	Rubber, PTFE, PFA It is available on ordering	PFA It is available on ordering	PFA It is available on ordering	PFA It is available on ordering
Conductivity	>5μS/cm			
Electrodes	Stainless Steel SUS316, HastelloyB2/C4, Platinum-Iridium, Tantalum			
Protection Class	IP67 / IP68 (Option)			
Fluid Temperature	-40 ~ +130°C (rubber liner ≤ 65°C)	-40 ~ +130°C	-40 ~ +130°C	-40 ~ +130°C

Converter

Supply Power	85-253V AC/16.8-26.4V AC/16.8-31.2V DC
Current Output	0/2-10mA, 0-5mA, 0/4-20mA, 0/4-10/12-20mA
Pulse Output	Active 24VDC pulse or passive optocoupler
Data Transfer	FIELDBUS, PROFIBUS, HART, RS485(Option)
Ext. Zero Return	Optocoupler Input
Ext. Totalizer Reset	Optocoupler Input
Forward/Reverse Metering	Signal over optocoupler output
Self Monitor	Yes
Local Display/Totalization	Yes
Housing	Aluminum(Standard), Stainless Steel(Option), IP67
Communication	ASCII-Protocol
Accuracy	±0.5% of rate, ±0.3% of rate (Option)

Remote

	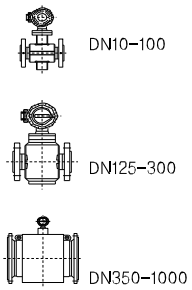	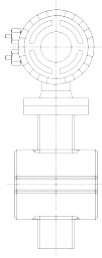	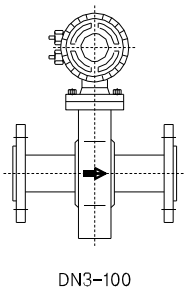	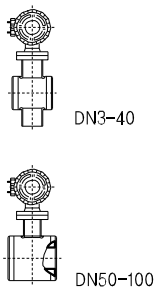
	Fixed Flange	Wafer Design	Fixed Flange	Wafer Design
Housing Material	Aluminum and Carbon Steel Housing Series 4000		Stainless Housing Series 2000	
	Option : SUS304 / SUS316			

Primary

Model	MGF1000S	MGF1000W	MGF2000F	MGF2000W
Size (mm)	DN10-DN1000	DN3-DN100	DN3-DN100	DN3-DN100
Pressure Class (MPa)	1.0-4.0(According to size)	1.0-4.0(According to size)	1.0-4.0(According to size)	1.0-4.0(According to size)
Liner	Rubber, PTFE, PFA It is available on ordering	PFA It is available on ordering	PFA It is available on ordering	PFA It is available on ordering
Conductivity	>5μS/cm			
Electrodes	Stainless Steel SUS316, HastelloyB2/C4, Platinum-Iridium, Tantalum			
Protection Class	IP67 / IP68 (Option)			
Fluid Temperature	-40 ~ +130°C (rubber liner≤ 65°C)	-40 ~ +130°C	-40 ~ +130°C	-40 ~ +130°C

Converter

Supply Power	85-253V AC/16.8-26.4V AC/16.8-31.2V DC
Current Output	0/2-10mA, 0-5mA, 0/4-20mA, 0/4-10/12-20mA
Pulse Output	Active 24VDC pulse or passive optocoupler
Data Transfer	HART(Option), RS485
Ext. Zero Return	Optocoupler Input
Ext. Totalizer Reset	Optocoupler Input
Forward/Reverse Metering	Signal over optocoupler output, Differential Flow(Foward-Reverse)
Self Monitor	Yes
Local Display/Totalization	Yes
Housing	Field Mount Housing, IP65
Communication	ASCII-Protocol
Accuracy	±0.5% of r ate, ±0.3% of r ate (Option)

Flowmeter Sizes, Pressure Ratings, Flow Range Nomograph

Meter Size		Std. Press. Rating PN	Min.Flow Range Flow Velocity 0 to 0.1 m/s	Max.Flow Range Flow Velocity 0 to 0.1 m/s
mm	Inch			
3	1/10	40	0 to 0.2 l/min	0 to 4 l/min
4	5/32	40	0 to 0.4 l/min	0 to 8 l/min
6	1/4	40	0 to 1 l/min	0 to 20 l/min
8	5/16	40	0 to 1.5 l/min	0 to 30 l/min
10	3/8	40	0 to 2.25 l/min	0 to 45 l/min
15	1/2	40	0 to 5 l/min	0 to 100 l/min
20	3/4	40	0 to 7.5 l/min	0 to 150 l/min
25	1	40	0 to 10 l/min	0 to 200 l/min
32	1-1/4	40	0 to 20 l/min	0 to 400 l/min
40	1-1/2	40	0 to 30 l/min	0 to 600 l/min
50	2	40	0 to 3 m^3/h	0 to 60 m^3/h
65	2-1/2	40	0 to 6 m^3/h	0 to 120 m^3/h
80	3	40	0 to 9 m^3/h	0 to 180 m^3/h
100	4	16	0 to 12 m^3/h	0 to 240 m^3/h
125	5	16	0 to 21 m^3/h	0 to 420 m^3/h
150	6	16	0 to 30 m^3/h	0 to 600 m^3/h
200	8	10/16	0 to 54 m^3/h	0 to 1080 m^3/h
250	10	10/16	0 to 90 m^3/h	0 to 1800 m^3/h
300	12	10/16	0 to 120 m^3/h	0 to 2400 m^3/h
350	14	10/16	0 to 165 m^3/h	0 to 3300 m^3/h
400	16	10/16	0 to 225 m^3/h	0 to 4500 m^3/h
450	18	10/16	0 to 300 m^3/h	0 to 6000 m^3/h
500	20	10	0 to 330 m^3/h	0 to 6600 m^3/h
600	24	10	0 to 480 m^3/h	0 to 9600 m^3/h
700	28	10	0 to 660 m^3/h	0 to 13200 m^3/h
800	32	10	0 to 900 m^3/h	0 to 18000 m^3/h
900	36	10	0 to 1200 m^3/h	0 to 24000 m^3/h
1000	40	10	0 to 1350 m^3/h	0 to 27000 m^3/h

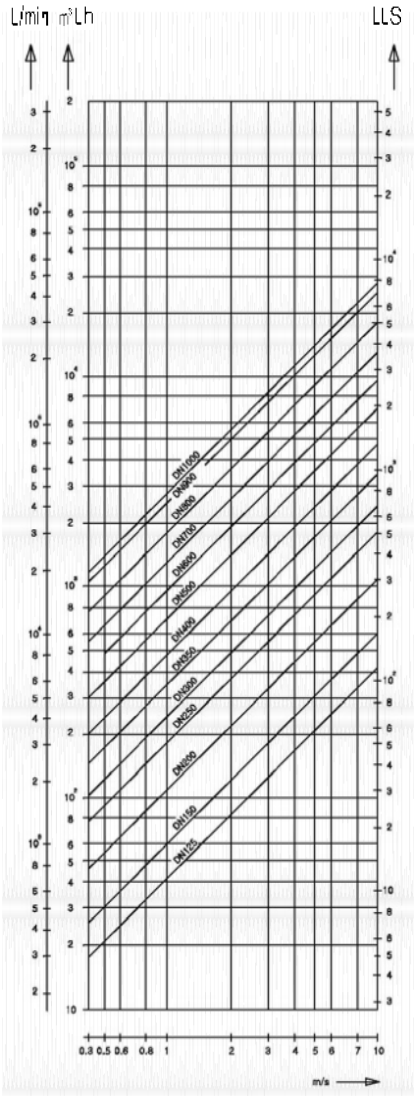

Flow Range Nomograph DN123~1000

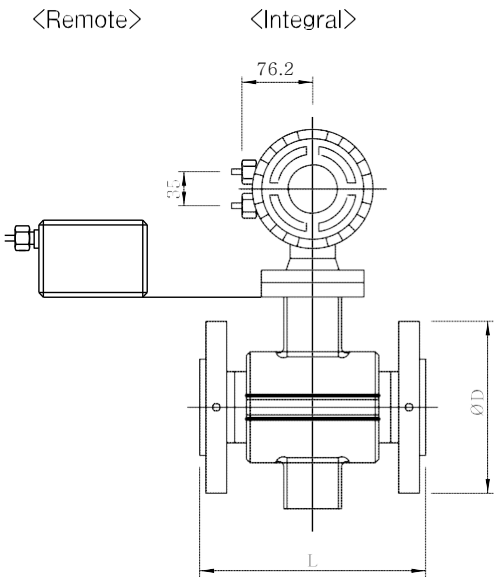

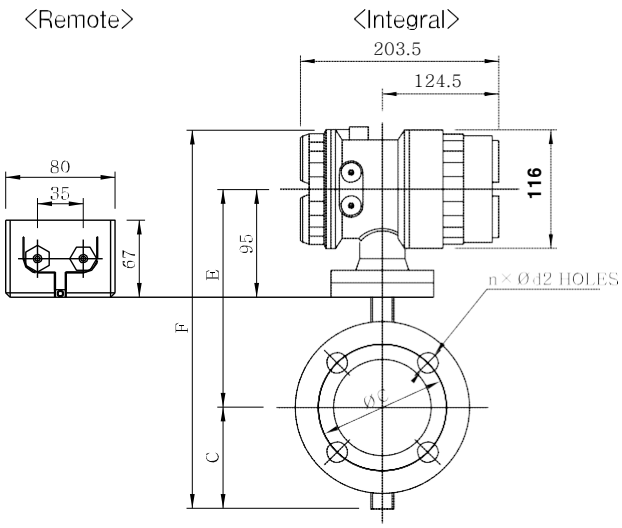

JIS/KS Flanges

Size	Pressure Rating	Dimensions(mm)							Approx. Weight
		L	D	C	F	E	n	d2	
10mm	10K	200	90	62	281	157	4	15	5.5kg
15mm	10K	200	95	62	281	157	4	15	5.5kg
25mm	10K	200	125	73	292	168	4	15	6kg
32mm	10K	200	135	73	292	168	4	19	6.5kg
40mm	10K	200	140	78	297	173	4	19	8kg
50mm	10K	200	155	82	301	177	4	19	8.5kg
65mm	10K	200	175	90	365	185	4	19	11kg
80mm	10K	200	185	104	377	199	8	19	16kg
100mm	10K	250	210	110	417	205	8	19	19kg
125mm	10K	250	250	130	422	232	8	23	20kg
150mm	10K	300	280	150	463	253	8	23	31kg

ANSI Flanges

Size	Pressure Rating	Dimensions(mm)							Approx. Weight
		L	D	C	F	E	n	d2	
10mm	150#	200	90	62	281	157	4	16	5.5kg
15mm	150#	200	95	62	281	157	4	16	5.5kg
25mm	150#	200	125	73	292	168	4	16	6kg
32mm	150#	200	135	73	292	173	4	16	6.5kg
40mm	150#	200	140	78	297	177	4	16	8kg
50mm	150#	200	155	82	301	185	4	16	8.5kg
65mm	150#	200	175	90	365	185	4	20	11kg
80mm	150#	200	185	104	377	199	4	20	16kg
100mm	150#	250	210	110	417	205	8	20	19kg
125mm	150#	250	250	130	422	232	8	23	20kg
150mm	150#	300	280	150	463	253	8	23	31kg

<Remote> <Integral>

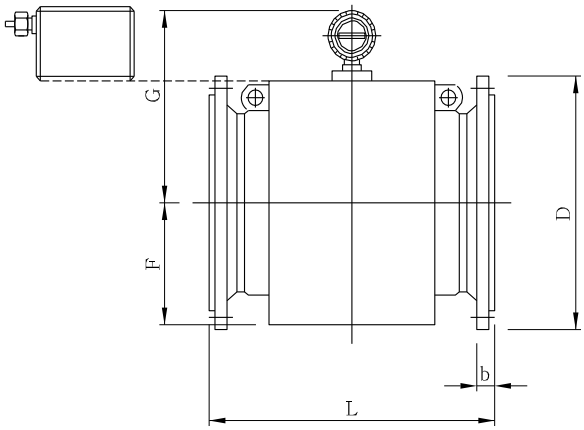

<Remote> <Integral>

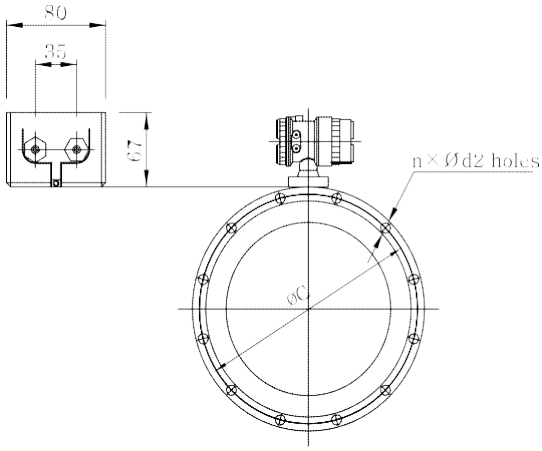

JIS/KS Flanges

Size	Pressure Rating	Dimensions(mm)							Approx. Weight
		L	D	F	b	G	n	d2	
200mm	10K	350	330	179	22	344	12	23	55kg
250mm	10K	450	400	206	24	386	12	25	81kg
300mm	10K	500	445	250	24	415	16	25	86kg
350mm	10K	500	490	250	26	430	16	25	131kg
400mm	10K	600	560	275	28	456	16	27	160kg
450mm	10K	600	620	300	30	480	20	27	178kg
500mm	10K	600	675	310	30	492	20	27	196kg
600mm	10K	600	795	362	32	543	24	33	230kg
700mm	10K	700	908	415	34	595	24	33	319kg
800mm	10K	800	1020	465	36	645	28	33	370kg
900mm	10K	900	1120	515	38	695	28	33	443kg
1000mm	10K	1000	1235	565	40	745	28	33	525kg

ANSI Flanges

Size	Pressure Rating	Dimensions(mm)							Approx. Weight
		L	D	F	b	G	n	d2	
200mm	150#	350	343	179	29	157	8	23	55kg
250mm	150#	450	406	206	30.5	157	12	26	81kg
300mm	150#	500	483	250	32	168	12	26	86kg
350mm	150#	500	535	250	35	168	12	29	131kg
400mm	150#	600	595	275	37	173	16	29	160kg
450mm	150#	600	635	300	40	177	16	32	178kg
500mm	150#	600	700	310	43	185	20	32	196kg
600mm	150#	600	813	362	47.8	199	20	35	230kg
700mm	150#	700	927	415	52.4	205	28	35	319kg
800mm	150#	800	1060	977.9					
900mm	150#	900	1170	1085.8					
1000mm	150#	1000	1290	1200.2					

<Remote> <Integral>

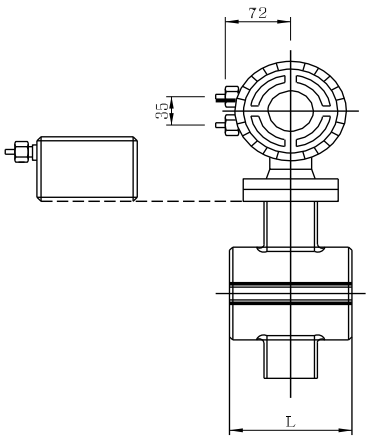

<Remote> <Integral>

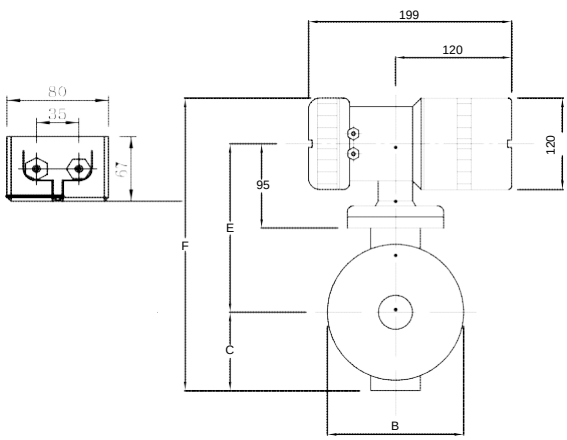

Wafer Type

Size	Pressure Rating	Dimensions(mm)					Approx. Weight
		L	B	C	E	F	
25mm	PN25	100	95	73	168	292	4.5kg
32mm	PN25	100	103	78	173	297	5kg
40mm	PN25	100	112	82	177	301	6kg
50mm	PN25	100	130	90	185	337	6.5kg
65mm	PN16	150	146	104	195	365	8kg
80mm	PN16	150	163	110	205	377	9kg
100mm	PN16	150	190	130	225	417	10kg

Converter Dimensions

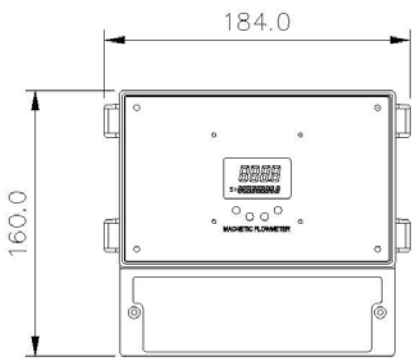

Field Mount Housing with Window

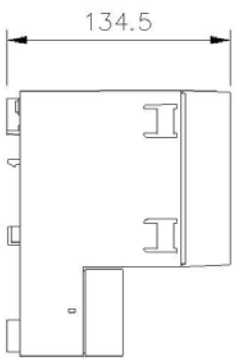

Cable connector M 20×1.5

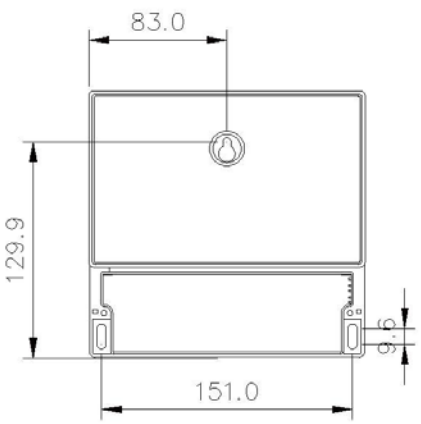

Mounting Dimensions

Integral Terminals, Analog Communication

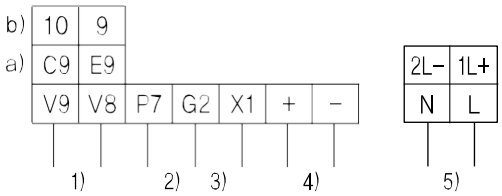

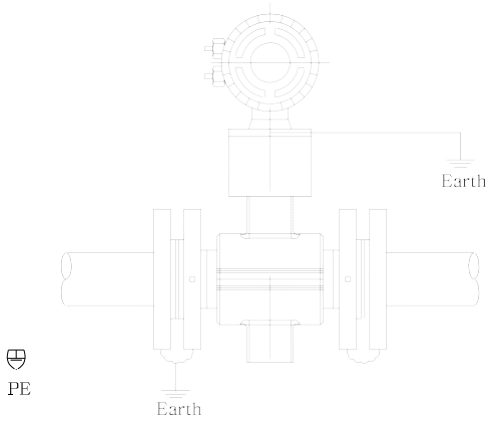

1) **a)** Scaled Pulse Output, passive, Pulse width adjustable between 0.1ms and 2000 ms Terminals : V8, V9, Function E9, C9

Optocoupler specifications :

f_{max} 5kHz

$0V \le U_{CEL} \le 2V$, $16V \le U_{CEL} \le 30V$;

$0mA \le I_{CEL} \le 0.2mA$, $2mA \le I_{CEL} \le 220mA$

b) Scaled Pulse Output, active, Pulse width adjustable between 0.1 ms and 2000 ms

Terminals : V8, V9, Function 9, 10

$20mA \le 1 \le 150mA$; $f_{max} \le 4Hz$, pulse width ≤ 50ms, Pulse T16v ≤ 25ms

$16V \le U \le 30V$; On / Off ratio 1:4 (Ton : Toff)

f_{max} 5kHz, $2mA \le 1 \le 20mA$; $16V \le U \le 30V$

2) Contact Output

Function assigned in the software as : System Monitor, Empty Pipe, Max.-Min.-Alarm or F/R signal

Terminals : G2, P7

Optocoupler specifications :

$0V \le U_{CEL} \le 2V$, $16V \le U_{CEL} \le 30V$;

$0mA \le I_{CEL} \le 0.2mA$, $2mA \le I_{CEL} \le 220mA$

3) Contact Input

Function assigned in the software as : external Zero Return or external Totalizer Reset.

Terminals : G2, X1

Optocoupler specifications : $16V \le U \le 30V$, $Ri = 2k\Omega$

4) Current Output Selectable

Terminals : +/-,

0/4-20mA load ≤ 600 Ω

0/2-10mA load ≤ 1200 Ω

0-5mA load ≤ 2400 ΩOp

tion : HART-Protocol

5) Supply Power

see Name plate

* The defailt factory setting is the Forward difection signal

Remote Terminals, Analog Communication

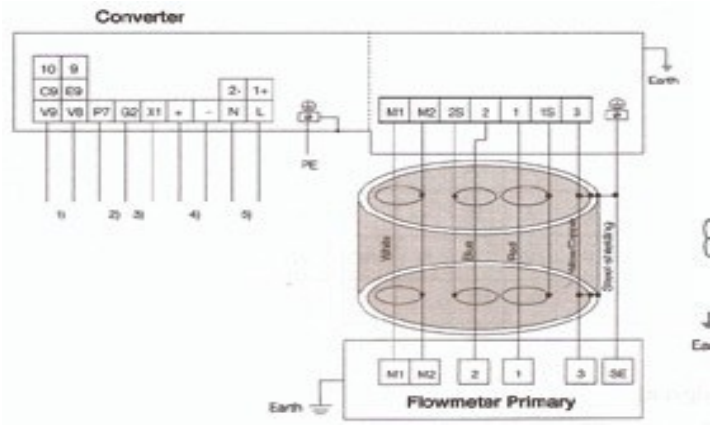

1) **a)** Scaled Pulse Output, passive, Pulse width adjustable between 0.1 ms to 2000 m s. Terminals : V8, V9, Function E9, C9

Optocoupler specifications :

f_{max} 5kHz

$0V \le U_{CEL} \le 2V$, $16V \le U_{CEL} \le 30V$;

$0mA \le I_{CEL} \le 0.2mA$, $2mA \le I_{CEL} \le 220mA$

b) Scaled Pulse Output, active, Pulse width adjustable between 0.1 ms and 2000 ms

Terminals : V8, V9, Function 9, 10

$20mA \le 1 \le 150mA$; $f_{max} \le 4Hz$, pulse width ≤ 50ms, Pulse T16v ≤ 25ms

$16V \le U \le 30V$; On / Off ratio 1:4 (Ton : Toff)

f_{max} 5kHz, $2mA \le 1 \le 20mA$; $16V \le U \le 30V$

2) Contact Output

Function assigned in the software as : System Monitor, Empty Pipe, Max.-Min.-Alarm or F/R signal

Terminals : G2, P7

Optocoupler specifications :

$0V \le U_{CEL} \le 2V$, $16V \le U_{CEL} \le 30V$;

$0mA \le I_{CEL} \le 0.2mA$, $2mA \le I_{CEL} \le 220mA$

3) Contact Input

Function assigned in the software as : external Zero Return or external Totalizer Reset.

Terminals : G2, X1

Optocoupler specifications : $16V \le U \le 30V$, $Ri = 2k\Omega$

4) Current Output

Selectable, Terminals : +/-,

0/4-20mA load ≤ 600 Ω

0/2-10mA load ≤ 1200 Ω

0-5mA load ≤ 2400 ΩOp tion : HART-Protocol

5) Supply Power

see Name plate

* The defailt factory setting is the Forward difection signal

Integral

Ordering Number																
1000 Series MGF1000 (DN ≤ 1000)																
2000 Series MGF2000 (DN ≤ 100)																
Liner																
Rubber(DN ≥ 25)	H															
PTFE(DN10-800)	T															
PFA(DN10-100)	P															
Other	Z															
Meter Size																
DN3		03														
DN4		04														
DN6		06														
DN10		10														
DN15		15														
DN20		20														
DN25		25														
DN32		32														
DN40		40														
DN50		50														
DN65		65														
DN80		80														
DN100		1H														
DN125		1Q														
DN150		1F														
DN200		2H														
DN250		2F														
DN300		3H														
DN350		3F														
DN400		4H														
DN450		4F														
DN500		5H														
DN600		6H														
DN700		7H														
DN800		8H														
DN900		9H														
DN1000		1T														
Electrode Material	Ground Electrode Material[1]															
SUS316	/none		S													
Hastelloy B2	/none		B													
Hastelloy C4	/none		H													
Titanium	/none		M													
Tantalum	/none		T													
Platinum-Iridium	/none		P													
0Cr18Ni12Mo2Ti	/with		E													
Hastelloy B2	/with		N													
Hastelloy C4	/with		O													
Titanium	/with		I													
Tantalum	/with		Q													
Platinum-Iridium	/with		G													
Pressure Rating	1.0MPa			C												
	1.6 MPa			D												
	2.5MPa			E												
	4.0MPa			F												
	Other(JIS, KS)			Z												
Flange Material	/ Piping Flange				None(wafer type)											
	/ none				0											
Carbon steel	/ none				1											
Stainless steel	/ none				3											
Carbon steel	/ with				5											
Stainless steel	/ with				7											
Accessories	None					A										
	Ground plate					C										
Temperature Range	Standard temperature < 130°C						S									
Protection Class	IP67							2								
Supply Power	High voltage 85-253V AC								E3G							
	Low voltage 16.8-26.4V AC/16-31.2V DC								E3K							
Display	Magnet Stick operation and lighted display															
In-/Output Options																
Current output+Pulse output active+Contact input+Contact output															01	
Current output+Pulse output passive+Contact input+Contact output															03	
Current output+Pulse passive+Contact output+RS485															05	
Application														Converte		
r housing with threads for cable connector M20×1.5 (Standard)																0

Remote

Ordering Number																
1001 Series MGF1000 (DN ≤ 1000)																
2001 Series MGF2000 (DN ≤ 100)																
Liner																
Rubber(DN ≥ 25)	H															
PTFE(DN10-800)	T															
PFA(DN10-100)	P															
Other	Z															
Meter Size																
DN3		03														
DN4		04														
DN6		06														
DN10		10														
DN15		15														
DN20		20														
DN25		25														
DN32		32														
DN40		40														
DN50		50														
DN65		65														
DN80		80														
DN100		1H														
DN125		1Q														
DN150		1F														
DN200		2H														
DN250		2F														
DN300		3H														
DN350		3F														
DN400		4H														
DN450		4F														
DN500		5H														
DN600		6H														
DN700		7H														
DN800		8H														
DN900		9H														
DN1000		1T														
Electrode Material	Ground Electrode Material[1]															
SUS316	/none			S												
Hastelloy B2	/none			B												
Hastelloy C4	/none			H												
Titanium	/none			M												
Tantalum	/none			T												
Platinum-Iridium	/none			P												
0Cr18Ni12Mo2Ti	/with			E												
Hastelloy B2	/with			N												
Hastelloy C4	/with			O												
Titanium	/with			I												
Tantalum	/with			Q												
Platinum-Iridium	/with			G												
Pressure Rating	1.0MPa				C											
	1.6 MPa				D											
	2.5MPa				E											
	4.0MPa				F											
	Other(JIS, KS)				Z											
Flange Material	/ Piping Flange					None(wafer type)										
	/ none					0										
Carbon steel	/ none					1										
Stainless steel	/ none					3										
Carbon steel	/ with					5										
Stainless steel	/ with					7										
Accessories	None						A									
	Ground plate						C									
Temperature Range	Standard temperature < 130°C							S								
Protection Class	IP67(thds. for cable connector M20×1.5)Std								2							
	IP68								3							

Remote E3 Converter

Accuracy : ≤0.5% of rate

Remote type converter			E3	
Housing Field mount housing rectangular (threads for cable connector M20×1.5) Standard			Q	
Supply Power	High voltage 85-253V AC		G	
	Low voltage 16.8-26.4V AC/16-31.2V DC		K	
Display	Magnet Stick operation and lighted display			D
In-/Output Options		Curren		
t output+Pulse output active+Contact input+Contact output		Current		01
output+Pulse output passive+Contact input+Contact output		Current		03
output+Pulse passive+Contact output+RS485				05

Remote E4 Converter

Accuracy : ≤0.5% of rate

External Converter MAG-XE E4				
Housing Field mount housing rectangular (threads for cable connector M20×1.5) Standard Field mount housing rectangular (threads for cable connector NPT1/2) Without housing (module only for replacement) for in-output options 01 to 06			Q R X	
Supply Power	High voltage 85-253V AC		G	
	Low voltage 16.8-26.4V AC/16-31.2V DC		K	
Display	Magnet Stick operation and lighted display			D
In-/Output Options		Curre		
nt output+Pulse output active+Contact input+Contact output		Curre		01
nt output+Pulse output active+Contact input+Contact output +HART-Protocal		Curren		02
t output+Pulse output passive+Contact input+Contact output		Curren		03
t output+Pulse output passive+Contact input+Contact output +HART-Protocal		Current		04
output+Pulse passive+Contact output+RS485		Pulse o		05
utput passive+Contact input+ProfibusDP		Profibus PA 3		06
.0				14
FOUNDATION FIELDBUS				15
Profibus PA 3.0 (with M12 pulg)				16

Headoffice 24, Homaesil-ro 90beon-gil, Gwonseon-gu, Suwon-si, Gyeonggi-do, Republic of Korea
Tel. +82.31.8900722 / Fax. +82.31.890.0724

Production and sales items

1. **Flow Metering System**
   - Flow Metering System (Gas/Liquid-Mass/Ultrasonic/Turbine/PD/Orifice)
   - Proving System (Pipe/Tank) Load/Unload System (Truck/Rail/Ship)
   - Analyzer for Gas (Gas Chromatography) and Moisture
   - Auto Sampling System
   - Calibration Facilities
2. **Environment and Water Treatment System**
   - Remote meter reading system on potable water
   - Leakage detecting system on city water
   - Drain and wastewater treatment system
3. **Flowmeter**
   - PD Flowmeter (Oil, Water, Chemical Fluid)
   - Vortex Flowmeter (Steam, Gas, Liquid)
   - Bi-Flowmeter
   - Mag Flowmeter
   - Mass Flowmeter

Rev. 0
2021.01